ATLANTIS

THERMOSTATIC ELECTRIC HEATING ELEMENT
FOR HEATED TOWEL RAILS
(WATER TEMPERATURE CONTROLLER)

USER AND INSTALLATION MANUAL FOR TOWEL RAIL MANUFACTURER OR PROFESSIONAL INSTALLER ONLY

The image is for illustration purposes only

SUPPLIED PARTS IN EACH PACKAGING

ATLANTIS **I** 2 spacer **I** Instruction leaflet

APPLICABLE EUROPEAN STANDARD

Electrical tests according to CEI EN 60335-1
Applicable directives: 2011/65/EU RoHS Directive,
2006/95/EC Low Voltage Directive, 2004/108/EC EMC Directive

COD. 571357670
REV. 06/2015

CE

THANK YOU FOR PURCHASING “ATLANTIS”

Electric towel radiator heating element with capillary thermostat for water temperature regulation

CAUTION

GENERAL CAUTION

- Read the instructions carefully before install and use ATLANTIS.
- ATLANTIS must be installed only by expert technicians and installation must be compliant with all applicable rules, and national safety regulations and laws in force in the country where the product is installed.
- ATLANTIS is intended to be used and installed into a towel rail. Any other use is strictly forbidden and potentially dangerous.
- ATLANTIS must be fitted before mounting the towel rail to the wall.
- Do not connect ATLANTIS to the power supply until the installation into a properly filled towel rail is completed.
- ATLANTIS must only be fitted vertically from the bottom of the towel rail.
- Do not cut the power supply cable to switch ATLANTIS OFF.
- Make sure that the power lines are appropriate for the load required.
- ATLANTIS is designed for use with water, water+glycol filled towel radiators
- Any contact between plastic parts of ATLANTIS and chemical products or alcohol (including the water or the mixture water+ glycol inside the tower rail) must be avoided.
- Installation must be carried out in accordance with conditions described in the Technical specification table (page 4).
- ATLANTIS power must be carefully selected in proportion to function of the towel rail size and thermal output. To select ATLANTIS electrical power, please refer to the towel rail manufacturer instructions when a certification related to the complete system (according to EN 60335-2-43) issued by an European recognised institute (like SEMKO, VDE, IMQ…) is available. In case of missing towel rail manufacturer certification, refer to EN 60335-2-43 to determine the correct ATLANTIS power to be installed in the towel rail.
- For any other technical details and requirements, please refer to the distributor/seller.
- In case of any doubts or insufficient information, please do not install or use ATLANTIS and contact the distributor/seller.
- ATLANTIS is not intended for use by persons (including children) with reduced physical, sensory or mental capabilities, or lack of experience or knowledge, unless they benefit by a person responsible for their safety, monitoring or instruction on the use of the appliance. You should monitor children to ensure that they do not play with the appliance.

SAFETY WARNINGS

- ATLANTIS is a class I appliance and is protected against water ingress according to its IP X4 degree of protection. The towel rail where ATLANTIS is fitted must be mounted inside the zone of the bathroom according to its IP degree of protection and electrical legislation in force. In case of doubt about the correct installation zone, refer to the relevant public institution.
- Switch the mains off before any installation, de-installation or maintenance operation on ATLANTIS.

Fig. 1

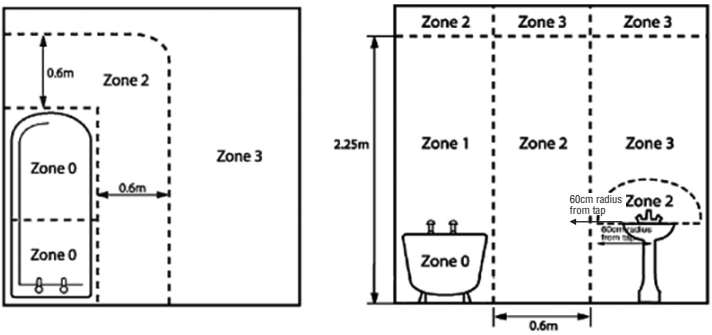

SAFETY INFORMATION

- Do not install ATLANTIS into a towel rail fitted in ZONE 0 or ZONE 1 (Fig.1).
- IMPORTANT: Always disconnect the electricity supply from the mains during installation and maintenance. It is recommended that the fuse is withdrawn or circuit breaker switched off at the distribution board while work is in progress (turning off the switch is not sufficient).
- Verify that the rated voltage of ATLANTIS is the same as the supply voltage.
- Make sure that the ATLANTIS is correctly earthed according to the standard in force.
- Check that the electricity supply system is connected through an MCB (Magnetothermic Circuit Breaker) and RCCB (Residual Current Circuit Breaker) devices.
- ATLANTIS MUST NOT BE POWERED IN AIR.
- ATLANTIS is intended to work only if completely immersed in the liquid (water) inside the towel rail.
- Do not touch the metallic parts of ATLANTIS if it is powered; before maintenance and de-installation operation wait the necessary time to ensure it is cold after it is switched off.
- In 'Electric only' ATLANTIS installation the towel rail MUST have a sufficient air gap to allow for water expansion.

MAIN RECOMMENDATION ON ELECTRICAL TOWEL RAIL (Applicable standard EN 60335-2-43)

- The electrical towel rail is intended only for dry towels washed in water. Any other use is forbidden.
- In 'Electric only' ATLANTIS installation, fill the towel rail with a certain percentage of water according to the towel rail manufacture instructions. In case of missing instructions, we recommend to fill the towel rail approximately 90% with water to allow for expansion; making sure that the ATLANTIS heating element is completely immersed in water. Addition of glycol and possibly an inhibitor is recommended, as part of this percentage mix.
- It is recommended to use in any installation (Electric only and Dual fuel installations) a self relief pressure valve (like 3 Bar valve) on the top part of the rail in the opposite side where the ATLANTIS is installed. In case of valve intervention, it is quite normal for liquid relief and water excess to possibly reach the floor. Please, take this aspect into consideration.
- In 'Dual-fuel' installation with central heating and ATLANTIS, at least one of the rail valves must always be left open, when the electrical element is switched on.
- For all other aspects, refer to EN 60335-1 and EN 60335-2-43.

GUARANTEE

ATLANTIS is guaranteed for 12 months from any manufacturing defects, from the date marked on it.
The guarantee of ATLANTIS is not valid in case of improper use or installation.

CONTACTS DETAILS

PRODUCT PRESENTATION

ATLANTIS is a self regulating PTC heating element integrating a thermomechanic capillary thermostat to regulate water temperature in electric towel rails with heat transfer fluid. The control is assembled with PTC Class I heating element and a capillary termostat bullb as a complete mounting kit including a 3G PVC cable. The unit can be connected to a fully electric towel radiator or a hybrid electric-hot water heater (dual fuel, central heating radiator). The symmetric design makes it suitable either for ladder type electric towel rails, as well as with traditional electric towel rails.

ATLANTIS is complete with:

- an LED which is ON when the product heating element is working.
- a rotating knob to set the towel rail water temperature.

ATLANTIS senses the water temperature around the area where the capillary bulb is located and is not intended to create a uniform thermal distribution over the whole electrical towel rail surface.

NOTE: According to the geometry, treatment, construction material and liquid (water or water and glycol) of a specific electrified towel rail with ATLANTIS the thermal distribution can be significantly different. For specific performance, you must refer to the towel rail manufacturer or carry out specific tests.

SYMBOLS AND GLOSSARY

ATLANTIS: is a PTC heating element integrating a capillary thermostat to regulate water temperature in electric towel rails.
ATLANTIS REGULATING BOX: the plastic parts which contains the thermomechanic capillary thermostat.
ATLANTIS NIPPLE: the metallic part of ATLANTIS connecting the ATLANTIS heating element and ATLANTIS regulating box.
CAPILLARY BULB: the sensor integrated into ATLANTIS which measures the water temperature.
LED: the lamp placed over the knob to show the ATLANTIS status.
GLYCOL: a substance which can be mixed with water and is normally used as antifreeze protection of the electrical towel rail.
3 BAR VALVE: a self relief pressure valve which limits the pressure at 3 bar.
SPACER: element that keeps the distance between pipe and resistor.

TECHNICAL DATASHEET

SPECIFICATION

White or Chrome regulating box	
Power (W)	Length (mm)
150	370
300	500
600	750
800	850

TECHNICAL SPECIFICATION TABLE

Operating voltage	230V ±10% AC 50 Hz
Heating Element Power	150W-300W-600W-800W
Insulation class	Class I
IP Degree of protection	IPX4
Operating Ambient Temperature	0°C ÷ 50°C
Storage Temperature	- 20°C ÷ 80°C
Max Humidity Level	85% at 25°C without condenses
Water Temperature Regulation	ON/OFF [5°C ÷ 70°C]±5°C with bimetallic capillary thermostat
Nipple thread	½” Gas cylindrical

INSTALLATION

BEFORE YOU START

- Check the pack to ensure you have all of the parts listed on pag.1 with no visible signs of damage. If any of the part is missing or appears damaged, you should return them to the point of purchase.
- Check that you have the correct size ATLANTIS for your towel rail. IT IS ESSENTIAL that the correct sized ATLANTIS is installed in line with the recommendation stated on the packaging or instruction of your towel rail CERTIFIED BY A EUROPEAN RECOGNISED APPROVAL INSTITUTE. IF YOU ARE NOT SURE OF THAT, PLEASE REFER TO CONTACT SECTION OR FOLLOW GENERAL WARNINGS SECTION.
- When you are ready to start, make sure that you have the right tools at hand, plenty of space and a clean dry area for assembly.
- Installation must be carried out in accordance with current standards and laws in force in the country in which the system is installed.
- Make sure that the towel rail female ½” GAS thread is sufficiently deep (minimum 10mm) in order to secure a watertight ATLANTIS gasket.

INSTALLATION WARNINGS

- **This appliance can be used by children aged from 8 years and above and persons with reduced physical, sensory or mental capabilities or lack of experience and knowledge if they have been given supervision or instruction concerning use of the appliance in a safe way and understand the hazards involved. Children shall not play with the appliance. Cleaning and user maintenance shall not be made by children without supervision.**
- **All-pole disconnection from the supply is required, incorporated in the fixed wiring. Switches intended to ensure all-pole disconnection must be directly connected with the supply terminals and must have a contacts distance of at least 3 mm in each pole**.
- Electrical towel rail must not be installed with the ATLANTIS regulating box located at the top. This can seriously damage the control box and create a dangerous situation with a risk of fire.
- Follow the conventional colours for wiring operations if no plug is present.

Brown	Live Wire
Blue	Neutral Wire
Yellow - Green	Earth

- The electricity supply must be adequate to support the required power.
- Protect the electricity supply with an RCCB (Residual Current Circuit Breaker) device.
- All metallic parts of the electrical towel rail fitted with ATLANTIS and powered must not exceed the temperature limits according to the applicable standard EN 60335-2-43 also in case of broken capillary thermostat control that continuously powers the heating element.
- ATLANTIS yellow/green earth wire must be connected to the corresponding yellow/green ground wire of the electricity supply at the mains. **(THIS PRODUCT MUST BE EARTHED)**
- Don't use the ATLANTIS regulating box to lean the electrical towel rail on the floor as you can damage the plastic and water can penetrate inside with a risk of electrical shock.
- The electrical heating element must be permanently connected to a suitable electricity supply by way of the cable provided. This should be via a fused spur in accordance with the IEE Wiring Regulations (BS7671). If sited in the bathroom, the Fused Connection Unit must be located out of reach of persons using the basin, shower or bath. If in doubt, consult a qualified electrician.
- Connect the ATLANTIS control unit to the mains using a BS Fused Connection Unit.
- The Fused Connection Unit should be fitted with a 5 Amps fuse to BS1362.

TOWEL RAIL INSTALLATION WARNINGS

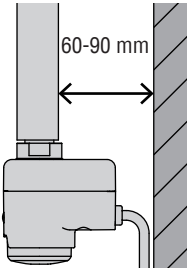

Fig. 2

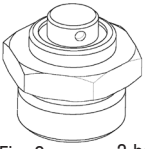

Fig. 3 3 bar valve

- The Towel rail has to be mounted parallel to the wall using the brackets recommended by the towel rail manufacturer. The distance between ATLANTIS and the wall must be between 60 and 90 mm (Fig. 2). In order to avoid a hazard for younger children, the electrical towel rail should be installed so that its bottom part is at least 600mm above the floor according to EN 60335-2-43/A1.
- ATLANTIS must be fitted to the towel rail before mounting the rail to the wall.
- Wrap a small quantity of PTFE tape around the ATLANTIS heating element thread and the T-piece thread (in case of Dual Fuel installation).
- Make sure that the towel rail is fitted with a component (like 3BAR Valve) which limits the risk of excessive pressure.
- The 3BAR valve (Fig. 3) must be installed on the top part of the towel rail.
  In case of 'Dual fuel' installation, a T-piece of 40mm maximum length (male thread excluded) is required.
- The Spacer (B) must not be hit, moved or removed during the installation of the towel heater (electric only ATLANTIS installation).
- The Spacer must not be torn, and must show no imperfections.

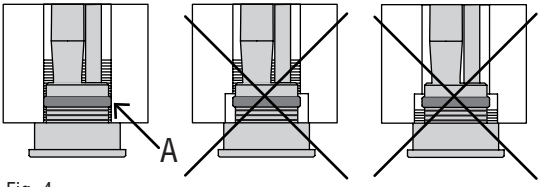

Fig. 4

The gasket (A) must be completely screwed into towel rail thread

INSTALLATION STEPS

ELECTRIC ONLY ATLANTIS INSTALLATION

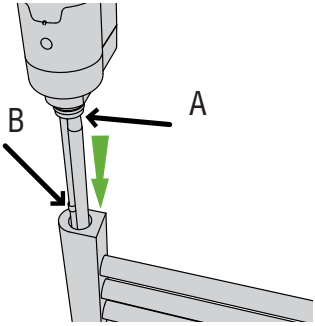

Fig. 5

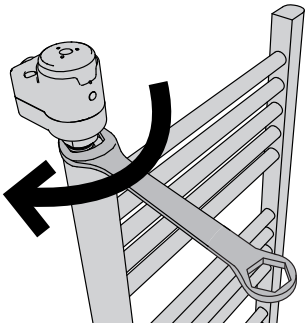

Fig. 6

1. Reverse the empty towel rail carefully leaning it on a soft cloth/ surface and fill it properly.
2. Take the ATLANTIS from the package, handling with care.
3. Insert the tip of ATLANTIS heating element into the bottom hole of the towel rail as shown and make sure to select the female ½” GAS thread of the towel rail in the opposite vertical tube to where the 3 Bar valve is installed (Fig. 5).
4. Insert the ATLANTIS heating element all the way.
5. Then using a 27 mm spanner screw the ATLANTIS heating element until the last nipple thread turn and if necessary continue in order to have the regulating box facing forward (Fig. 6).
6. Make sure that the ATLANTIS gasket is fully sealed to the female thread of the towel rail (Fig. 4).
7. Install properly the electrified towel rail with the ATLANTIS into the wall according to towel rail manufacturer instructions. Make sure that the towel rail has the ATLANTIS bottom side.
8. Verify that no water leakages occur and re-tighten joints as necessary. Make sure that ATLANTIS parts are completely dry before proceeding with the installation (in case of water leakage refer to DANGEROUS CONDITION AND RISK section).
9. Make sure that the power lines are appropriate for the load required.
10. Connect the ATLANTIS cable to the mains power according to current wiring regulations in force in the country where the product is installed.

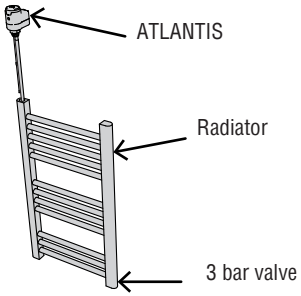

Fig. 7

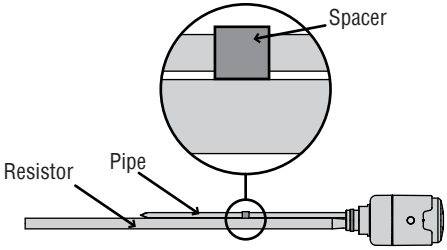

Fig. 8

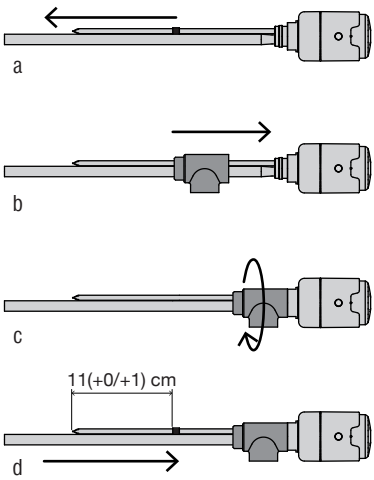

Fig. 9

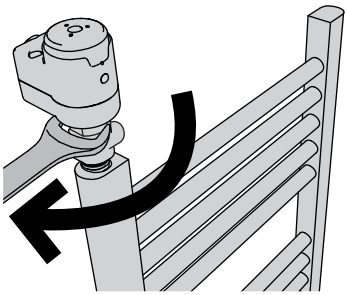

Fig. 10

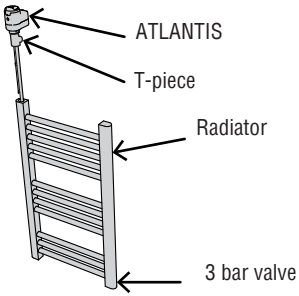

Fig. 11

1. Reverse the empty towel rail carefully leaning it on a soft cloth/ surface.
2. Take the ATLANTIS from the package, handling with care.
3. Remove the spacer without damaging it (Fig. 9a). Do not use tools or lubricants. Use gloves. Ensure that the pipe and the resistor are not bent and stay parallel to each other.
4. Insert the T-piece in the ATLANTIS (Fig. 9b), screw and tighten it firmly (Fig. 9c). Do not use tools.
5. Insert the spacer to the distance shown in the Figure (Fig. 9d). If the spacer is damaged, replace it. Do not use tools or lubricants. Ensure that the pipe and the resistor are not bent and stay parallel to each other.
6. Insert the tip of the ATLANTIS heating element into the bottom hole of the towel rail as shown and make sure to select the female ½” GAS thread of the towel rail in the opposite vertical tube to where the 3 Bar valve is installed.
7. Then using a 27 mm spanner turn the T-piece with screwed ATLANTIS heating element until the last nipple thread turn and if necessary continue in order to have the regulating box facing forward (Fig. 10).
8. Make sure that the ATLANTIS gasket is fully sealed to the female thread of the towel rail.
9. Install properly the electrified towel rail with the ATLANTIS into the wall and connect it to the central heating system according to towel rail manufacturer instructions. Make sure that the towel rail is properly filled and the ATLANTIS is on the bottom side.
10. Verify that no water leakages occur and re-tighten joints as necessary. Make sure that ATLANTIS parts are completely dry before proceeding with the installation (in case of water leakage refer to DANGEROUS CONDITION AND RISK section).
11. Connect the ATLANTIS cable to the mains power according to current wiring regulation in force in the country where the product is installed.

ATLANTIS POSITION

The figures (Fig. 12) show the optimal positions for the ATLANTIS. Any other position is the responsibility of the installer and must be tested.

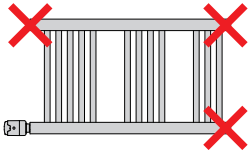

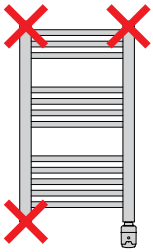

Fig. 12

NOTE: If the ATLANTIS regulation box is not facing forward, it is possible to rotate the element until it faces the correct position (Fig. 13); however do not exceed the rotation angle by more than 180° degree. If the rotation angle is exceeded, the gasket seal must be replaced.
Check that the heating element is completely immersed in the liquid.

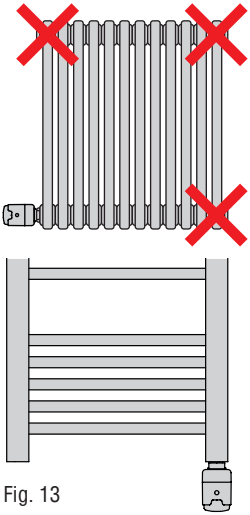

Fig. 13

TO UNINSTALL

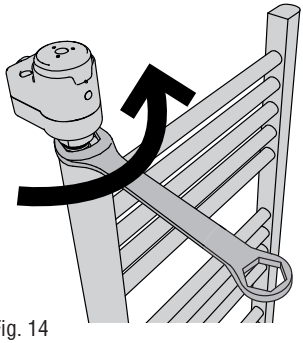

Fig. 14

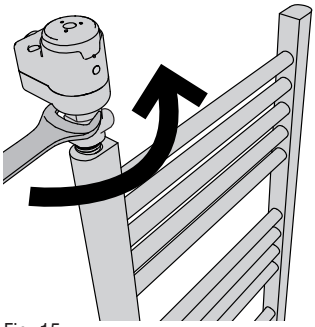

Fig. 15

IN ELECTRIC ONLY ATLANTIS INSTALLATION

1. Disconnect the cable from the mains power.
2. Remove the electrical towel rail from the wall and reverse it carefully leaning it on a soft cloth/surface.
3. Using a 27 mm spanner unscrew the ATLANTIS, rotating it anticlockwise until the ATLANTIS thread is completely off from towel rail ½"GAS female thread (Fig. 14).
4. Remove the ATLANTIS from the towel rail.

DUAL FUEL INSTALLATION
(CENTRAL HEATING AND ATLANTIS)

1. Disconnect the cable from the mains power.
2. Close both rail valves, remove the water from the towel rail and dry the working area.
3. Remove the towel rail from the wall and reverse it carefully leaning it on a soft cloth/surface.
4. Using a 27 mm spanner unscrew the T-piece with screwed the ATLANTIS, rotating it anticlockwise until T-piece thread is completely off from towel rail ½"GAS female thread (Fig. 15).
5. Remove spacer.
6. Remove T-piece with screwed the ATLANTIS from the towel rail.

WARNING:
AFTER DISCONNECTING, ATLANTIS CANNOT BE REUSED.
REPLACE THE PRODUCT WITH A NEW ONE.

USAGE

USAGE WARNINGS

The ATLANTIS incorporates a capillary thermostat bulb sensor to measure the water temperature. The LED is ON when the heater is working.

WORKING DESCRIPTION

HOW TO USE

- ATLANTIS has a knob which is used to select the desired temperature of the Towel rail water: temperature setting between [5°C ÷ 70°C] ± 5°C (Fig. 16).
- The LED is ON when the heater is working.

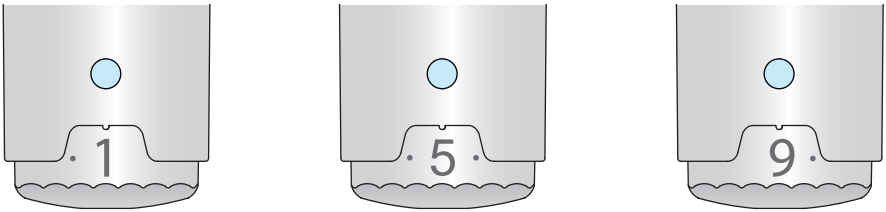

Min. position
5°C ± 5°C

Intermediate
position

Max. position
70°C ± 5°C

Fig. 16

IMPROPER USE

All different usages which are not described in the “PRODUCT PRESENTATION” section according to the USAGE section, are to be intended as improper usage. In case of doubts refer to the seller.
Never switch the ATLANTIS ON if the towel rail is empty.
Before installation, never switch the ATLANTIS ON to verify heating effectiveness.

DANGEROUS CONDITION AND RISKS

During installation, de-installation and maintenance, ensure working place safety until the operation is completed.
Don’t use excessive force to turn the knob as you risk to break it.
In case of anomalous or strange working condition or if ATLANTIS has visible signs of damage disconnect the ATLANTIS and send it to the seller for investigation or replacement.If the ATLANTIS regulating box shows some plastic cracks, please, contact the seller for replacement.
ATLANTIS power supply cable cannot be repaired. If it is damaged, contact the seller to replace the complete ATLANTIS unit. Never try to modify or repair the ATLANTIS in any of its parts by yourself.
Never try to remove the knob as water can penetrate inside the ATLANTIS regulation box resulting in a risk of electrical shock. Never knock the ATLANTIS against anything. Handle with extreme care during every operation and never leave it in wet areas.

MAINTENANCE

Ordinary
At regular periods of time, depending on the usage of the product ATLANTIS:
- Turn the regulating knob at maximum and minumum level to check if working properly.
- Pay particular attention to verify that there is no water leakage checking the visible and exposed ATLANTIS parts.
If at least one of the above controls fails, refer to Dangerous condition and risks section.
Extraordinary
We recommend the replacement of ATLANTIS (into the specific towel rail) every 5 years.

CLEANING

To clean ATLANTIS, use only a dry and clean soft cloth.
Make small locally round movements.
Apply a light pressure especially to the chrome plastic surfaces to avoid potential scratches.

DIAGNOSTIC

If the ATLANTIS regulation mode is selected at maximum temperature and the towel rail doesn't heat at all, this may indicates operation failure and the product must be replaced.
If LED is ON but the towel rail doesn't heat, waiting 2 hours. If the situation doesn't change, contact the customer service.

SPARE PARTS

ATLANTIS must be replaced totally as it has no spare parts.
IMPORTANT: In case of doubts, please, contact the Seller or refer to Contacts section.
IMPORTANT: Please, retain these instructions for future reference

NOTES FOR DISPOSAL OF THIS PRODUCT VALID FOR THE EUROPEAN UNION

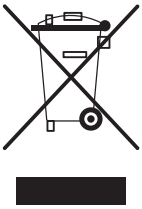

The crossed-out wheeled-bin symbol on your product reminds you that in the European Union all electrical and electronic products and batteries must be taken to separate collection at the end of their working life. Do not dispose of these products as unsorted municipal waste. Return the products to collection to prevent possible harm to the environment or human health from uncontrolled waste disposal and to promote the sustainable reuse of material resources. Collection information is available from the product retailer, local waste authorities or national producer responsibility organizations. For more information, see product country-specific information.

The manufacturer declines all responsibility for any inaccuracies in this document due to printing or transcription errors. It reserves the right to make any alterations to its products deemed necessary or useful. This document or any part of it cannot be copied, edited or reproduced without written authorization from the manufacturer.